International Journal of Systems Science, 2014
http://dx.doi.org/10.1080/00207721.2013.874509

Non-linear generalised minimum variance control state space design for a second-order Volterra series model

Mohsen Maboodi[a,*], Eduardo F. Camacho[b] and Ali Khaki-Sedigh[a]

[a]*Industrial Control Center of Excellence, Department of Systems and Control Engineering, Faculty of Electrical Engineering, K. N. Toosi University of Technology, Tehran, Iran;* [b]*Department of Systems Engineering and Automation, University of Seville, Seville, Spain*

(*Received 27 March 2013; accepted 1 October 2013*)

This paper presents a non-linear generalised minimum variance (NGMV) controller for a second-order Volterra series model with a general linear additive disturbance. The Volterra series models provide a natural extension of a linear convolution model with the nonlinearity considered in an additive term. The design procedure is entirely carried out in the state space framework, which facilitates the application of other analysis and design methods in this framework. First, the non-linear minimum variance (NMV) controller is introduced and then by changing the cost function, NGMV controller is defined as an extended version of the linear cases. The cost function is used in the simplest form and can be easily extended to the general case. Simulation results show the effectiveness of the proposed non-linear method.

Keywords: NGMV; NMV; Volterra model; state space design; stochastic control

Downloaded by [Mohsen Maboodi] at 22:53 16 January 2014

1. Introduction

Minimum variance (MV) and generalised minimum variance (GMV) controllers were developed for the control of linear stochastic systems (Astrom, 1970; Clarke & Gawthrop, 1979; Grimble, 1988). However, industrial control loops inherently include nonlinearities, e.g., in plant, control valves and sensors (Doyle, Pearson, & Ogunnaike, 2002; Nelles, 2001). It is common in control engineering to linearise non-linear models around a nominal working point. Although the control strategy seems to work well for small deviations, non-linear models are superior over large deviations when linear approximations fail. Extension of the MV control methods to non-linear systems has been addressed in many papers such as Sales and Billingsa (1990), Bittanti and Piroddi (1993), Majecki and Grimble (2004) and Harris and Yu (2007).

The MV controller was introduced by Astrom (1967) for minimum phase systems and was later extended to non-minimum phase systems (Astrom, 1970). MV controllers in their basic form usually have high gains, wide bandwidth and cause large control signal variations (Jelali, 2006). These limit the real application of MV control. The GMV controller introduced by Clarke and Hastings-James (1971) is an extended version of the MV controller, which solved some of the above-mentioned problems.

Sales and Billingsa (1990) extended MV control for non-linear models. They introduced an MV self-tuning algorithm based on non-linear autoregressive moving average with exogenous inputs (NARMAX) models. Non-linear systems, which can be described by superposing a non-linear system and a linear (or partially non-linear) additive disturbance, have been used by some authors for extending linear MV and GMV controllers to the non-linear case (Bittanti & Piroddi, 1993; Grimble, 2005; Harris & Yu, 2007). Grimble (2005) pointed out that the above representation is not restrictive and the practical disturbance models are usually linear time invariant (LTI). Moreover, he expressed the plant model in a very general non-linear operator form. In another work (Bittanti & Piroddi, 1993), neural network with multilayer perceptron is used to design a non-linear control based on the MV control. In this paper, they considered a class of non-linear systems where nonlinearity is present in the exogenous input.

In these papers, difference equations are used for the design procedures. There is a considerable number of works in the literature extending these methods to the state space framework (Grimble, 2010; Inoue, Yanou, Sato, & Hirashima, 2001; Kwong, 1987; Silveira & Coelho, 2011). Changing the design framework makes it possible to use the well-established state space analysis and design tools. In this paper, MV and GMV are extended to a class of non-linear systems with an additive linear disturbance in the state space framework. The method is based on designing a d-step model prediction for a non-linear second-order Volterra series model.

Extending the MV controller for non-linear systems (NMV) has been an active area of research (Bittanti

*Corresponding author. Email: maboodi@ee.kntu.ac.ir

© 2014 Taylor & Francis

Downloaded by [Mohsen Maboodi] at 22:53 16 January 2014

& Piroddi, 1993; Grimble, 2005; Harris & Yu, 2007; Sales & Billingsa, 1990). However, these extensions do not provide a closed-form solution for the NMV control. In this paper, an analytical formula for the control signal is presented based on second-order Volterra series models.

Non-linear generalised minimum variance (NGMV) control was introduced by Grimble (2005, 2010), where the plant model is in a general non-linear operator form. This generality has led to restrictions on the choice of the cost weightings, e.g., in order to calculate the control signal, some operators must have a stable inverse. In this paper, the NGMV control will be presented for the second-order Volterra series models in a specific case without restrictions on the operators.

The proposed method is presented in a state space framework which simplifies the design procedure while avoiding the solution of the Diophantine equation.

Volterra series models are widely used to approximate the dynamics of non-linear processes (Aliyev, Stamps, & Gatzke, 2008; Asyali & Juusola, 2005; Kibangou, Favier, & Hassani, 2005; Kuech & Kellermann, 2006; Zhou & DeBrunner, 2007). It is well known that Volterra series models are good candidates for development of non-linear techniques. The flexibility of Volterra models allows the modelling of process dynamics in a wide range of different areas without a deep understanding of the system (Doyle et al., 2002). Volterra series models can be used to approximate arbitrarily well any stable system with fading memory characteristics where a better approximation requires higher degree models with longer memory sequences (Boyd & Chua, 1985).

For parameter estimation purposes, linear in the parameters models are preferred, which include non-autoregressive models (such as the Hammerstein series and the Volterra series) and autoregressive models (such as the generalised Hammerstein and the so-called parametric Volterra models). The non-autoregressive non-linear models can be considered as generalised linear weighting function models, whereas the autoregressive models are special classes of the polynomial NARMAX models. Transformation of the autoregressive Volterra series models to the non-autoregressive representation is derived in Gruber, Bordons, Bars, and Haber (2010).

The paper is organised as follows. Section 2 introduces a representation of a second-order Volterra series model with delay. In Section 3, state space representation of the Volterra model is described. This model is augmented to include the disturbance model and then the d-step ahead predictor is obtained. This is followed by deriving NMV and NGMV controllers' equations. Simulation examples demonstrate the main features of the proposed controllers in Section 5. Conclusions are given in Section 6.

2. Process description

General single input single output (SISO) non-autoregressive Volterra series models are defined as systems mapping the input signal $u(t)$ into the output $y(t)$ given by the infinite series (Doyle et al., 2002)

$$y(t) = y_0 + y_1(t) + y_2(t) + \cdots + y_k(t) + \ldots, \tag{1}$$

where

$$y_1(t) = \sum_{j_1=0}^{\infty} h_1(j_1)\, u(t - j_1),$$

$$y_2(t) = \sum_{j_1=0}^{\infty}\sum_{j_2=0}^{\infty} h_2(j_1, j_2)\, u(t - j_1)\, u(t - j_2),$$

and

$$y_k(t) = \sum_{j_1=0}^{\infty}\cdots\sum_{j_k=0}^{\infty} h_k(j_1, \ldots, j_k) \prod_{i=1}^{k} u(t - j_i), \tag{2}$$

where y_0 is the model offset, h_1 are the linear term parameters and $h_n \forall n \geq 2$ represents the non-linear term parameters.

A SISO second-order, non-autoregressive Volterra series model with the truncation of terms and under consideration of causality, symmetry and commutativity can be defined as

$$y(t) = y_0 + \sum_{i=0}^{N_1} h_1(i)\, u(t - i) + \sum_{i=0}^{N_2}\sum_{j=i}^{N_2} h_2(i, j)\, u(t - i)\, u(t - j). \tag{3}$$

Note that the lower limits of the sums can be changed from 0 to 1 in Equation (3) for causal systems. In Figure 1, the plant output is denoted by $m(t)$ and $y(t)$ is the closed-loop system output.

In order to obtain a simple expression, variable N will be used as a common truncation order for the linear and non-linear terms with $N = \max(N_1, N_2)$. In the case of $N_1 > N_2$, i.e., $N = N_1$, the missing second-order term parameters are defined as $h_2(i, j) = 0 \forall i > N_2 \forall j > N_2$; for $N_2 > N_1$ and therefore $N = N_2$, the linear term parameters are defined as $h_1(i) = 0 \forall i > N_1$. Moreover, if the plant has a delay d, the second-order Volterra series model is described by

$$m(t) = \sum_{i=0}^{N} h_1(i)\, u(t - i - d) + \sum_{i=0}^{N}\sum_{j=i}^{N} h_2(i, j)\, u(t - i - d)\, u(t - j - d). \tag{4}$$

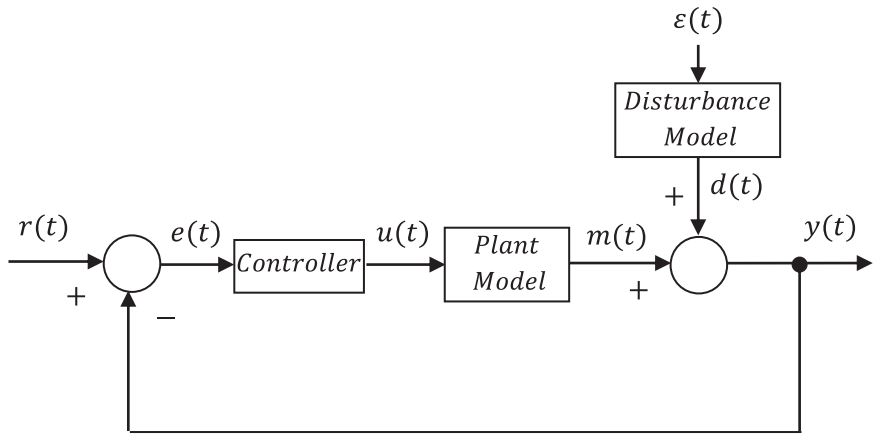

Figure 1. Block diagram of the non-linear plant.

Downloaded by [Mohsen Maboodi] at 22:53 16 January 2014

Note that the constant offset given in Equation (3) has been removed by means of a linear transformation. For the sake of simplicity of the notation and without loss of generality, the offset is considered to the zero.

3. State space design consideration

3.1. Plant

In a first step, the past input values of the non-autoregressive second-order Volterra series model (4) can be viewed as system states, e.g., the model states are defined by

$$x_i(t) = u(t-d-i+1), \qquad i = 1, 2, \ldots, N, N+1, \tag{5}$$

where $x_i(t)$ is the ith element of the state vector $\mathbf{x_m}(t)$; hence

$$\begin{aligned} x_1(t) &= u(t-d), \\ x_2(t) &= u(t-d-1), \\ &\vdots \\ x_N(t) &= u(t-d-N+1), \\ x_{N+1}(t) &= u(t-d-N). \end{aligned} \tag{6}$$

Now it is obvious that Equation (4) can be expressed as a non-linear state space model defined by

$$\begin{aligned} \mathbf{x_m}(t) &= \mathbf{A_m}\mathbf{x_m}(t-1) + \mathbf{B_m}u(t-d), \\ m(t) &= \mathbf{H}_1\mathbf{x_m}(t) + \mathbf{x_m}^T(t)\mathbf{H}_2\mathbf{x_m}(t), \end{aligned} \tag{7}$$

where the state matrix $\mathbf{A_m} \in \mathbb{R}^{(N+1)\times(N+1)}$ and the input matrix $\mathbf{B_m} \in \mathbb{R}^{(N+1)}$ are as follows:

$$\mathbf{A_m} = \begin{bmatrix} 0 & 0 & \cdots & 0 & 0 & 0 \\ 1 & 0 & \cdots & 0 & 0 & 0 \\ 0 & 1 & \cdots & 0 & 0 & 0 \\ \vdots & \vdots & \ddots & \vdots & \vdots & \vdots \\ 0 & 0 & \cdots & 1 & 0 & 0 \\ 0 & 0 & \cdots & 0 & 1 & 0 \end{bmatrix}, \mathbf{B_m} = \begin{bmatrix} 1 \\ 0 \\ 0 \\ \vdots \\ 0 \\ 0 \end{bmatrix}, \tag{8}$$

Moreover, matrices $\mathbf{H}_1 \in \mathbb{R}^{(N+1)}$ and $\mathbf{H}_2 \in \mathbb{R}^{(N+1)\times(N+1)}$ are defined by

$$\mathbf{H}_1 = [h_1(0) \quad h_1(1) \quad h_1(2) \quad \ldots \quad h_1(N)] \tag{9}$$

and

$$\mathbf{H}_2 = \begin{bmatrix} h_2(0,0) & h_2(0,1) & h_2(0,2) & \ldots & h_2(0,N) \\ 0 & h_2(1,1) & h_2(1,2) & \ldots & h_2(1,N) \\ 0 & 0 & h_2(2,2) & \ldots & h_2(2,N) \\ \vdots & \vdots & \vdots & \ddots & \vdots \\ 0 & 0 & 0 & \ldots & h_2(N,N) \end{bmatrix}. \tag{10}$$

3.2. Disturbance

It is assumed that the disturbance signal has a general linear form. State space equations of disturbance are defined as (Davis & Vinter, 1985)

$$\begin{aligned} \mathbf{x_d}(t+1) &= \mathbf{A_d}\mathbf{x_d}(t) + \mathbf{B_d}\varepsilon(t), \\ d(t) &= \mathbf{C_d}\mathbf{x_d}(t) + \varepsilon(t), \end{aligned} \tag{11}$$

where the state matrix is $\mathbf{A_d} \in \mathbb{R}^{M\times M}$ and the input matrix is $\mathbf{B_d} \in \mathbb{R}^{M}$ and $\varepsilon(t)$ is a zero-mean, unit-variance white noise. The disturbance is unknown and it must be estimated.

3.3. Augmented state space matrices

By including the disturbance equations (11) into the system dynamics (7), the assumed process model becomes

$$\begin{aligned} \mathbf{X}(t) &= \mathbf{A}\mathbf{X}(t-1) + \mathbf{B}u(t-d) + \mathbf{\Gamma}\varepsilon(t-1), \\ y(t) &= \mathbf{C}\mathbf{X}(t) + \mathbf{X}^T(t)\mathbf{H}\mathbf{X}(t) + \varepsilon(t), \end{aligned} \tag{12}$$

where

$$\begin{aligned} \mathbf{X}(t) &= \begin{bmatrix} \mathbf{x_m}(t) \\ \mathbf{x_d}(t) \end{bmatrix}, \quad \mathbf{A} = \begin{bmatrix} \mathbf{A_m} & \mathbf{0}_{(N+1)\times M} \\ \mathbf{0}_{M\times(N+1)} & \mathbf{A_d} \end{bmatrix}, \\ \mathbf{B} &= \begin{bmatrix} \mathbf{B}_{\mathrm{m}} \\ \mathbf{0}_{M\times 1} \end{bmatrix}, \quad \mathbf{\Gamma} = \begin{bmatrix} \mathbf{0}_{(N+1)\times 1} \\ \mathbf{B}_d \end{bmatrix}, \\ \mathbf{C} &= \begin{bmatrix} \mathbf{H}_1 & \mathbf{C_d} \end{bmatrix}, \quad \mathbf{H} = \begin{bmatrix} \mathbf{H}_2 & \mathbf{0}_{(N+1)\times M} \\ \mathbf{0}_{M\times(N+1)} & \mathbf{0}_{M\times M} \end{bmatrix}. \end{aligned} \tag{13}$$

It is now desired to calculate the d-step ahead MV predictor for a non-linear Volterra series of order 2 with a general additive state space disturbance (12). The procedure is inspired by Silveira and Coelho (2011). First, an estimation of $\mathbf{X}(t+d)$ is derived by recursively using Equation (12) as follows:

$$\begin{aligned} \mathbf{X}(t) &= \mathbf{A}\mathbf{X}(t-1) + \mathbf{B}u(t-d) + \mathbf{\Gamma}\varepsilon(t-1), \\ \mathbf{X}(t+1) &= \mathbf{A}\mathbf{X}(t) + \mathbf{B}u(t-d+1) + \mathbf{\Gamma}\varepsilon(t), \\ \mathbf{X}(t+2) &= \mathbf{A}\mathbf{X}(t+1) + \mathbf{B}u(t-d+2) + \mathbf{\Gamma}\varepsilon(t+1), \\ &= \mathbf{A}^2\mathbf{X}(t) + \mathbf{A}\mathbf{B}u(t-d+1) + \mathbf{A}\mathbf{\Gamma}\varepsilon(t) \\ &\quad + \mathbf{B}u(t-d+2) + \mathbf{\Gamma}\varepsilon(t+1), \\ &\quad \vdots \\ \mathbf{X}(t+d) &= \mathbf{A}^d\mathbf{X}(t) + \sum_{i=1}^{d}\mathbf{A}^{(d-i)}\mathbf{B}u(t-d+i) \\ &\quad + \sum_{i=1}^{d}\mathbf{A}^{(d-i)}\mathbf{\Gamma}\varepsilon(t-1+i). \end{aligned} \tag{14}$$

Now to estimate $\mathbf{X}(t+d)$ with information only up to t, i.e., $\mathbf{X}(t+d|t)$ or $\hat{\mathbf{X}}(t+d)$, splitting Equation (14) into the unpredictable and the predictable components give

$$\begin{aligned} \mathbf{X}(t+d) = &\underbrace{\mathbf{A}^d\mathbf{X}(t) + \sum_{i=1}^{d}\mathbf{A}^{(d-i)}\mathbf{B}u(t-d+i) + \mathbf{A}^{(d-1)}\mathbf{\Gamma}\varepsilon(t)}_{\text{past and present information (predictable)}} \\ &+ \underbrace{\sum_{i=2}^{d}\mathbf{A}^{(d-i)}\mathbf{\Gamma}\varepsilon(t-1+i).}_{\text{future information(unpredictable)}} \end{aligned} \tag{15}$$

Therefore, we have

$$\begin{aligned} \hat{\mathbf{X}}(t+d) = \mathbf{A}^d\mathbf{X}(t) &+ \sum_{i=1}^{d}\mathbf{A}^{(d-i)}\mathbf{B}u(t-d+i) \\ &+ \mathbf{A}^{(d-1)}\mathbf{\Gamma}\varepsilon(t). \end{aligned} \tag{16}$$

$\mathbf{X}(t)$ is not completely measured, it must be estimated by an observer. As the process states are formed by the past known inputs and the unknown disturbance states, estimation of the latter is necessary; so we have

$$\begin{aligned} \bar{\mathbf{x}}_{\mathbf{d}}(t) &= \mathbf{A_d}\bar{\mathbf{x}}_{\mathbf{d}}(t-1) + \mathbf{B_d}\hat{\varepsilon}(t-1), \\ \hat{\varepsilon}(t-1) &= y(t-1) - \mathbf{H}_1\mathbf{x}_{\mathrm{m}}(t-1) - \mathbf{x}_{\mathbf{m}}^T(t-1) \\ &\quad \times \mathbf{H}_2\mathbf{x}_{\mathrm{m}}(t-1) - \mathbf{C_d}\bar{\mathbf{x}}_{\mathbf{d}}(t-1). \end{aligned} \tag{17}$$

Define

$$\bar{\mathbf{X}}(t) = \begin{bmatrix} \mathbf{x_m}(t) \\ \bar{\mathbf{x}}_{\mathbf{d}}(t) \end{bmatrix}. \tag{18}$$

Now, according to Equations (12) and (16), we can introduce the MV predictor as

$$\hat{y}(t+d|t) = \mathbf{C}\hat{\mathbf{X}}(t+d) + \hat{\mathbf{X}}^T(t+d)\mathbf{H}\hat{\mathbf{X}}(t+d), \tag{19}$$

with

$$\begin{aligned} \hat{\mathbf{X}}(t+d|t) = \mathbf{A}^d\bar{\mathbf{X}}(t) &+ \sum_{i=1}^{d}\mathbf{A}^{(d-i)}\mathbf{B}u(t-d+i) \\ &+ \mathbf{A}^{(d-1)}\mathbf{\Gamma}\left(y(t) - \mathbf{C}\bar{\mathbf{X}}(t) - \bar{\mathbf{X}}^T(t)\mathbf{H}\bar{\mathbf{X}}(t)\right). \end{aligned} \tag{20}$$

4. NMV and NGMV controller design

In the last section, a d-step ahead MV predictor for a non-linear Volterra series of order 2 with a general additive disturbance was introduced. By manipulation of the previous equation, a simple form of this predictor can be expressed as follows:

$$\hat{\mathbf{X}}(t+d) = \mathbf{k}_1 u(t) + \mathbf{k}_2, \tag{21}$$

Downloaded by [Mohsen Maboodi] at 22:53 16 January 2014

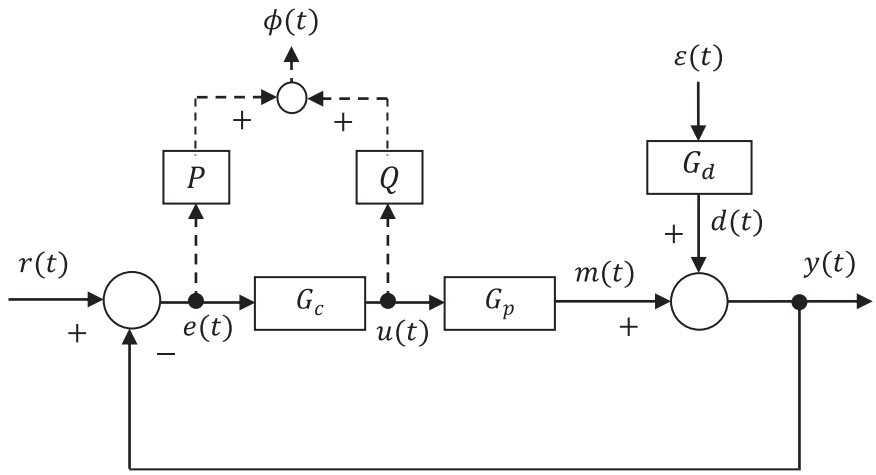

Figure 2. The generalised output.

Downloaded by [Mohsen Maboodi] at 22:53 16 January 2014

where $\mathbf{k}_1$ and $\mathbf{k}_2$ are defined as

$$\begin{aligned}\mathbf{k}_1 &= \mathbf{B},\\ \mathbf{k}_2 &= \mathbf{A}^d\bar{\mathbf{X}}(t) + \sum_{i=1}^{d-1}\mathbf{A}^{(d-i)}\mathbf{B}u(t-d+i)\\ &\quad + \mathbf{A}^{(d-1)}\mathbf{\Gamma}(y(t) - \mathbf{C}\bar{\mathbf{X}}(t) - \bar{\mathbf{X}}^T(t)\mathbf{H}\bar{\mathbf{X}}(t)).\end{aligned} \tag{22}$$

Moreover, with substitution of Equation (21) in Equation (19), we have

$$\hat{y}(t+d|t) = au^2(t) + bu(t) + c, \tag{23}$$

where a, b and c are defined as

$$\begin{aligned}a &= \mathbf{k}_1^T\mathbf{H}\mathbf{k}_1,\\ b &= \mathbf{C}\mathbf{k}_1 + \mathbf{k}_1^T\mathbf{H}\mathbf{k}_2 + \mathbf{k}_2^T\mathbf{H}\mathbf{k}_1,\\ c &= \mathbf{C}\mathbf{k}_2 + \mathbf{k}_2^T\mathbf{H}\mathbf{k}_2.\end{aligned} \tag{24}$$

4.1. Non-linear minimum variance control

NMV control is concerned with the design of a controller, which minimises the variance of the error in the non-linear plant output. In the case of regulation ($r = 0$), the cost index to be minimised is the variance of the output at time $t + d$ given all the information up to the time t:

$$J_1 = E\{(y(t+d|t))^2\}, \tag{25}$$

where $E\{\}$ denotes the expectation operator. The control signal, which minimises Equation (25), is given by

$$u(t) = -\frac{b}{2a}, \qquad \text{if } \Delta = b^2 - 4ac < 0. \tag{26}$$

When $\Delta > 0$, there are two solutions for the control signal:

$$u(t) = \begin{cases} \dfrac{-b+\sqrt{\Delta}}{2a} \triangleq u_1(t) \\ \dfrac{-b-\sqrt{\Delta}}{2a} \triangleq u_2(t) \end{cases}, \quad \text{if } \Delta = b^2 - 4ac > 0. \tag{27}$$

Selection between these two control signals in Equation (27) depends on the type of plant and control strategy. For instance, the control signal, which is closer to the previous one, can be selected if there are limitations in the slew rate of actuator. Another option is selecting the control signal with the smallest absolute value.

4.2. Non-linear generalised minimum variance control

Straightforward extension of NMV controller by considering control action penalty leads to the more flexible approach of NGMV controller. NGMV control algorithm minimises the following cost function:

$$J_2 = E\{\phi(t)^2\}, \tag{28}$$

where $\phi(t)$ is the generalised output signal (Figure 2):

$$\phi(t) = Pe(t) + Qu(t). \tag{29}$$

The weights P and Q in the GMV or NGMV controller act as the design parameters.

For the sake of simplicity, we use the following simple form of generalised output ($P = -1$ and $Q = q^{-d}$), although the results can be extended to the general case:

$$\phi(t+d) = y(t+d) + \lambda u(t). \tag{30}$$

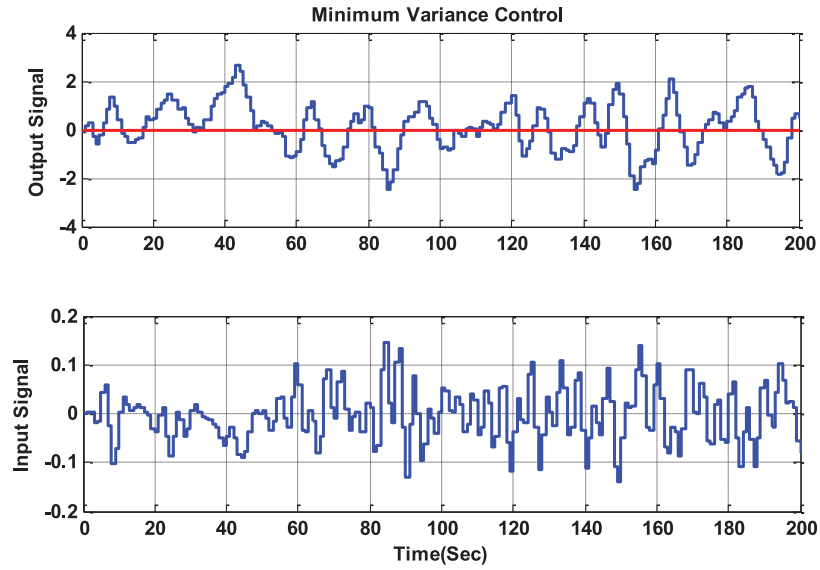

(a)

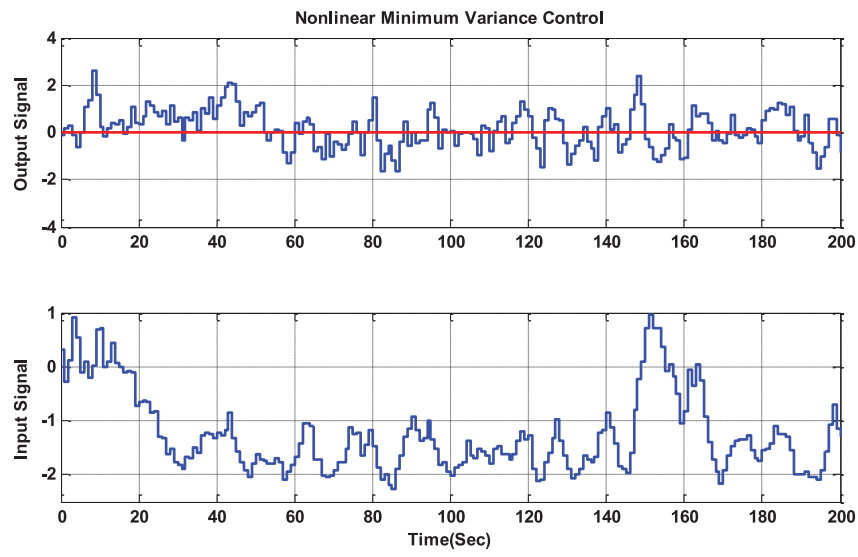

(b)

Figure 3. Comparison of MV (a) and NMV (b) controllers around the set point ($r = 0$).

Therefore, for the design of the control signal which minimises Equation (28), we can use Equations (26) and (27), replacing b by $b + \lambda$.

5. Simulation

In order to illustrate the proposed method, consider a non-linear dynamic system represented by a second-order Volterra series as

$$y(t) = 0.2u_{t-3} + 0.3u_{t-4} + u_{t-5} + 0.8u_{t-3}^2 - 0.7u_{t-4}^2 + 0.5u_{t-5}^2 + 0.8u_{t-3}u_{t-4} - 0.5u_{t-3}u_{t-5} + d(t). \tag{31}$$

Disturbance is defined as

$$d(t) = \frac{\varepsilon(t)}{1 - 1.6q^{-1} + 0.8q^{-2}}. \tag{32}$$

State space representation of Equation (32) according to Equation (11) is as follows:

$$\begin{aligned} \mathbf{x_d}(t+1) &= \underbrace{\begin{bmatrix} 1.6 & -0.8 \\ 1 & 0 \end{bmatrix}}_{\mathbf{A_d}} \mathbf{x_d}(t) + \underbrace{\begin{bmatrix} 1 \\ 0 \end{bmatrix}}_{\mathbf{B_d}} \varepsilon(t), \\ d(t) &= \underbrace{\begin{bmatrix} 1.6 & -0.8 \end{bmatrix}}_{\mathbf{C_d}} \mathbf{x_d}(t) + \varepsilon(t). \end{aligned} \tag{33}$$

Downloaded by [Mohsen Maboodi] at 22:53 16 January 2014

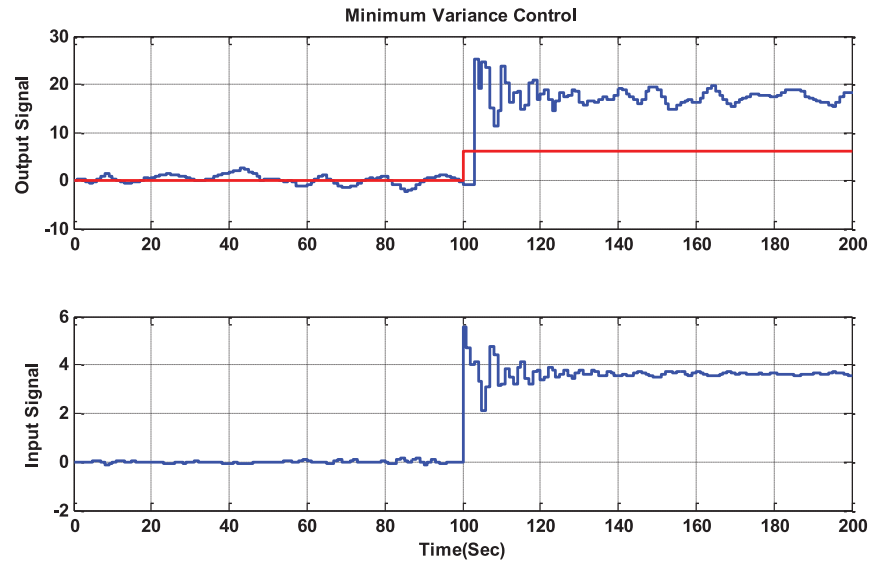

(a)

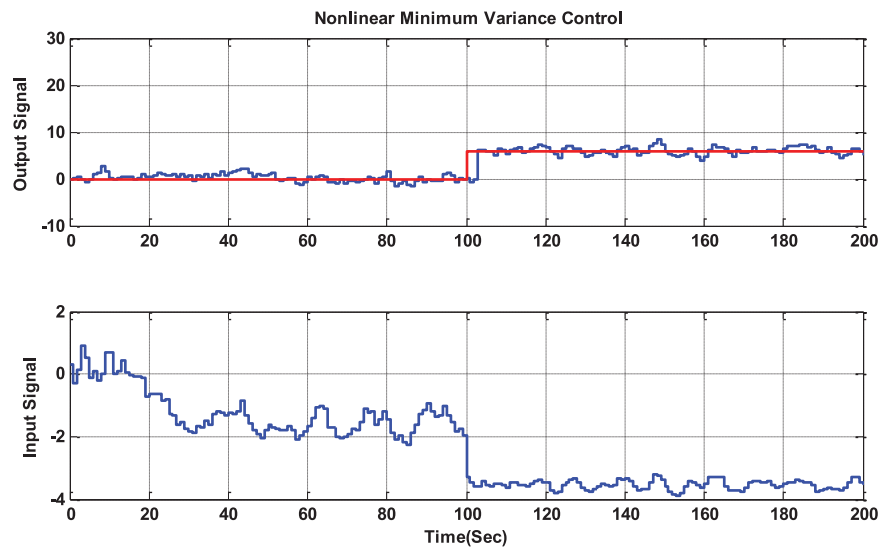

(b)

Figure 4. Comparison of MV (a) and NMV (b) controllers around the different set point.

where q^{-1} is the backshift operator and $\varepsilon(t)$ is a white noise sequence with zero mean and variance 0.1.

According to Equation (4), we have

$$h_1(0) = 0.2; h_1(1) = 0.3; h_1(2) = 1; h_2(0,0) = 0.8;$$
$$h_2(0,1) = 0.8, h_2(0,2) = 0.5; h_2(1,1) = -0.7;$$
$$h_2(1,2) = 0;\ h_2(2,2) = 0.5.$$

The model states are defined by

$$x_1(t) = u(t-3),$$
$$x_2(t) = u(t-4),$$
$$x_3(t) = u(t-5).$$

Therefore, we have

$$\underbrace{\begin{bmatrix} x_1(t) \\ x_2(t) \\ x_3(t) \end{bmatrix}}_{\mathbf{x_m}(t)} = \underbrace{\begin{bmatrix} 0 & 0 & 0 \\ 1 & 0 & 0 \\ 0 & 1 & 0 \end{bmatrix}}_{\mathbf{A_m}} \underbrace{\begin{bmatrix} x_1(t-1) \\ x_2(t-1) \\ x_3(t-1) \end{bmatrix}}_{\mathbf{x_m}(t-1)} + \underbrace{\begin{bmatrix} 1 \\ 0 \\ 0 \end{bmatrix}}_{\mathbf{B_m}} u(t-3),$$

$$m(t) = \underbrace{[h_1(0) \quad h_1(1) \quad h_1(2)]}_{\mathbf{H_1}} \mathbf{x_m}(t) + \mathbf{x_m}^T(t)$$
$$\times \underbrace{\begin{bmatrix} h_2(0,0) & h_2(0,1) & h_2(0,2) \\ 0 & h_2(1,1) & h_2(1,2) \\ 0 & 0 & h_2(2,2) \end{bmatrix}}_{\mathbf{H_2}} \mathbf{x_m}(t).$$

Downloaded by [Mohsen Maboodi] at 22:53 16 January 2014

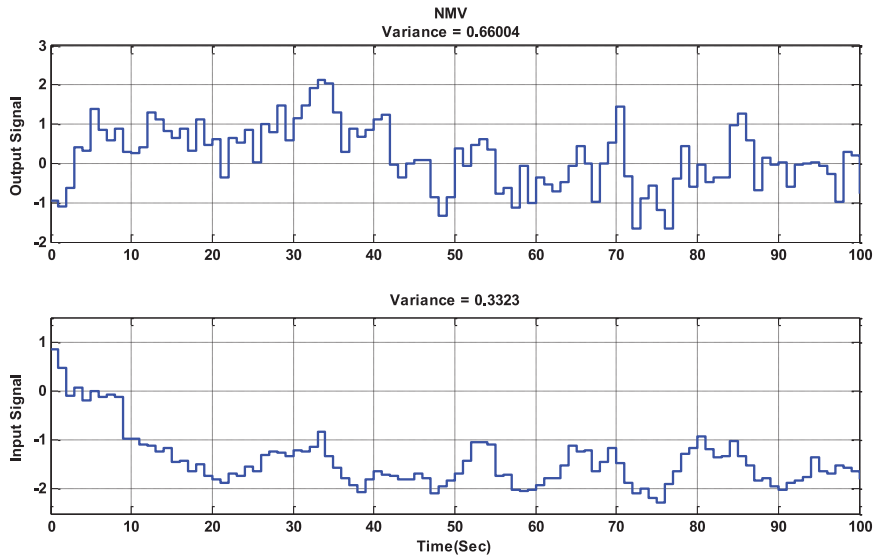

(a)MV controller

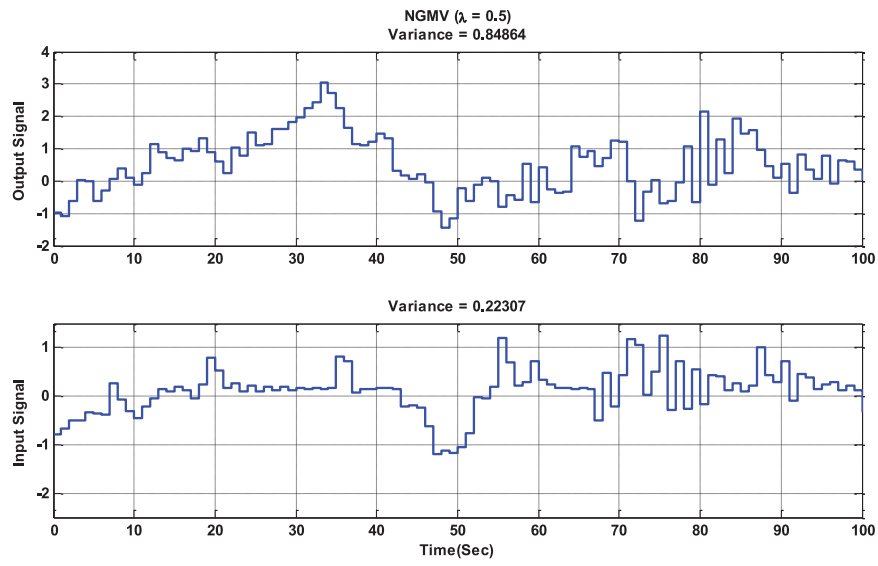

(b)NMV controller

Figure 5. Comparison of NMV (a) and NGMV (b) controllers.

Parameters of the augmented state space matrices in Equation (12) are defined as

$$\mathbf{A} = \begin{bmatrix} 0 & 0 & 0 & 0 & 0 \\ 1 & 0 & 0 & 0 & 0 \\ 0 & 1 & 0 & 0 & 0 \\ 0 & 0 & 0 & 1.6 & -0.8 \\ 0 & 0 & 0 & 1 & 0 \end{bmatrix} \mathbf{B} = \begin{bmatrix} 1 \\ 0 \\ 0 \\ 0 \\ 0 \end{bmatrix} \Gamma = \begin{bmatrix} 0 \\ 0 \\ 0 \\ 1 \\ 0 \end{bmatrix}$$

$$\mathbf{C} = \begin{bmatrix} 0.2 & 0.3 & 1 & 1.6 & -0.8 \end{bmatrix},$$

$$\mathbf{H} = \begin{bmatrix} 0.8 & 0.8 & -0.5 & 0 & 0 \\ 0 & -0.7 & 0 & 0 & 0 \\ 0 & 0 & 0.5 & 0 & 0 \\ 0 & 0 & 0 & 0 & 0 \\ 0 & 0 & 0 & 0 & 0 \end{bmatrix}.$$

First, the output variances of the closed-loop system with an NMV controller and a linear MV controller are compared. For the design of MV controller, the system is linearised around $r = 0$. The results are shown in Figures 3 and 4. It can be seen, as was expected, that there are no considerable differences between the output variance of the linear and non-linear systems, because the process operated close to the linearisation point.

The result of set point changes can be seen in Figure 4. It can be observed that the linear MV controller does not work well for a non-linear process in other working points; however, in comparison with MV, NMV will be valid for a wider area around the working point.

Downloaded by [Mohsen Maboodi] at 22:53 16 January 2014

Downloaded by [Mohsen Maboodi] at 22:53 16 January 2014

Table 1. Comparison between output and control signal variances resulting from different controllers.

Controller type	Output variance	Control signal variance
MV	0.70327	0.35685
NMV	0.66004	0.58321
NGMV	0.83134	0.40548

Since the MV controller is only concerned with the minimisation of the output signal variance, the variance of the control signal may be unacceptable. A practical approach to overcome this problem is using the GMV which limits the control effort. NMV and NGMV controllers are subsequently compared and the results are shown in Figure 5.

In this figure, (a) and (b) show outputs $y(t)$ and control signals $u(t)$ generated by the regulating NMV and NGMV controllers, where the control weight is selected as $\lambda = 0.5$. As was expected, in comparison with the NMV, the control signal variance in the NGMV is smaller and the output signal variance is slightly higher. Table 1 shows a comparison between output and control signal variances resulting from MV, NMV and NGMV controllers ($r = 0, \lambda = 0.5$).

6. Conclusion

In this paper, we present an approach for designing NMV and NGMV controllers for a non-linear, second-order Volterra model in the state space framework which makes it possible to use the well-established state space analysis and design tools. A d-step ahead MV predictor is introduced for this non-linear structure. Using the developed predictor, an NMV and an NGMV is introduced. For the sake of simplicity, we use the simple form of the generalised output ($P = -1$ and $Q = q^{-d}$ in Equation (29)), although the results can be extended to the general case. Simulations showed the advantages of the proposed controllers.

Notes on contributors

Mohsen Maboodi received his BSc degree in electrical engineering from K. N. Toosi University of Technology, Tehran, Iran, in 2007 and MSc degree in control engineering from Sharif University of Technology, Tehran, Iran, in 2009. He is currently a PhD student in control engineering at K. N. Toosi University of Technology. His research interests include control performance assessment (CPA), non-linear model predictive control and system identification.

Eduardo F. Camacho received his doctorate in electrical engineering from the University of Seville, Seville, Spain, where he is now a full professor of the Department of System Engineering and Automatic Control. He has written the books Model Predictive Control in the Process Industry (1995), Advanced Control of Solar Plants (1997) and Model Predictive Control (1999) (2004 second edition) published by Springer-Verlag; Control e Instrumentación de Procesos Quimicos published by Ed. Sintesis; Control of Dead-Time Processes published by Springer-Verlag (2007) and Control of Solar Systems published by Springer-Verlag (2011). He has served on various international federation of automatic control (IFAC) technical committees and chaired the IFAC publication committee from 2002 to 2005. He was the president of the European Control Association (2005–2007) and chaired the IEEE/CSS International Affairs Committee (2003–2006); He is the chair of the IFAC Policy Committee and a member of the IEEE/CSS Board of Governors. He has acted as evaluator of projects at national and European levels and was appointed manager of the Advanced Production Technology Program of the Spanish National R&D Program (1996–2000). He was one of the Spanish representatives on the programme committee of the Growth Research Programme and expert for the programme committee of the NMP research priority of the European Union. He has carried out review and editorial work for various technical journals and many conferences. At present he is one of the editors of the IFAC journal, *Control Engineering Practice*, editor at large of the *European Journal of Control* and subject editor of the journal *Optimal Control: Methods and Applications*. He was the publication chair for the IFAC World Congress b'02 and general chair of the joint IEEE CDC and ECC.05, and co-general chair of the joint 50th IEEE CDC-ECC 2011.

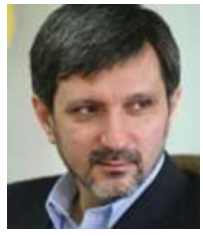

Ali Khaki Sedigh is currently a professor of control systems with the Department of Electrical and Computer Engineering, K. N. Toosi University of Technology, Tehran, Iran. He obtained an honours degree in mathematics in 1983, a master's degree in control systems in 1985 and a PhD in control systems in 1988, all in the UK. He is the author and co-author of about 90 journal papers, 170 international conference papers and has published 14 books in the area of control systems. His main research interests are adaptive and robust multivariable control systems, complex systems and chaos control, research ethics and the history of control.

References

Aliyev, T.L., Stamps, A.T., & Gatzke, E.P. (2008). *Improved crude oil processing using second-order Volterra models and nonlinear Model Predictive Control*. Proceedings of the American Control Conference, pp. 2215–2220.

Astrom, K.J. (1967). Computer control of a paper machine – an application of linear stochastic control theory. *IBM Journal of Research and Development, 11*, 389–405.

Astrom, K.J. (1970). *Introduction to stochastic control theory*. New York, NY: Academic Press.

Asyali, M.H., & Juusola, M. (2005). Use of Meixner functions in estimation of Volterra kernels of nonlinear systems with delay. *IEEE Transactions on Biomedical Engineering, 52*, 229–237.

Bittanti, S., & Piroddi, L. (1993). *Minimum variance control of a class of nonlinear plants with neural networks*. Third International Conference on Artificial Neural Networks, Milano, Italy, pp. 168–172.

Boyd, S., & Chua, L. (1985). Fading memory and the problem of approximating nonlinear operators with Volterra series. *IEEE Transactions on Circuits and Systems, 32*, 1150–1161.

Clarke, D.W., & Gawthrop, P.J. (1979). Self-tuning control. *Proceedings of the Institution of Electrical Engineers, 126*, 633–640.

Clarke, D.W., & Hastings-James, R. (1971). Design of digital controllers for randomly disturbed systems. *Proceedings of the Institution of Electrical Engineers, 118*, 1503–1506.

Davis, M.H.A., & Vinter, R.B. (1985). *Stochastic modelling and control*. London: Chapman and Hall.

Doyle, F.J., Pearson, R.K., & Ogunnaike, B.A. (2002). *Identification and control using Volterra models*. London: Springer.

Grimble, M.J. (1988). Generalized minimum variance control law revisited. *Optimal Control Applications and Methods, 9*, 63–77.

Grimble, M.J. (2005). Non-linear generalized minimum variance feedback, feedforward and tracking control. *Automatica, 41*, 957–969.

Grimble, M.J. (2010). State-space approach to nonlinear predictive generalised minimum variance control. *International Journal of Control, 83*, 1529–1547.

Gruber, J.K., Bordons, C., Bars, R., & Haber, R. (2010). Nonlinear predictive control of smooth nonlinear systems based on Volterra models. Application to a pilot plant. *International Journal of Robust and Nonlinear Control, 20*, 1817–1835.

Harris, T.J., & Yu, W. (2007). Controller assessment for a class of nonlinear systems. *Journal of Process Control, 17*, 607–619.

Inoue, A., Yanou, A., Sato, T., & Hirashima, Y. (2001). *A state-space based design of generalized minimum variance controller equivalent to transfer-function based design*. Proceedings of American Control Conference, Arlington, VA, pp. 2761–2766.

Jelali, M. (2006). An overview of control performance assessment technology and industrial applications. *Control Engineering Practice, 14*, 441–466.

Kibangou, A.Y., Favier, G., & Hassani, M.M. (2005). Selection of generalized orthonormal bases for second-order Volterra filters. *Signal Processing, 85*, 2371–2385.

Kuech, F., & Kellermann, W. (2006). Orthogonalized power filters for nonlinear acoustic. *Applied Speech and Audio Processing, 86*, 1168–1181.

Kwong, R.H. (1987). *On the LQG problem with correlated noise and its relation to minimum variance control*. 26th IEEE Conference on Decision and Control, Ontario, Canada, pp. 763–767.

Majecki, P., & Grimble, M.J. (2004). *Controller performance design and assessment using nonlinear generalized minimum variance benchmark: Scalar case*. Control 2004, University of Bath, UK, ID-232.

Nelles, O. (2001). *Nonlinear system identification: From classical approaches to neural networks and fuzzy models*. Berlin: Springer-Verlag.

Sales, K.R., & Billingsa, S.A. (1990). Self-tuning control of nonlinear ARMAX models. *International Journal of Control, 51*, 753–769.

Silveira, A.S., & Coelho, A.R. (2011). Generalized minimum variance control state space design. *IET Control Theory & Applications, 5*, 1709–1715.

Zhou, D., & DeBrunner, V. (2007). Efficient adaptive nonlinear filters for nonlinear active noise control. *IEEE Transactions on Circuits and Systems I: Regular Papers, 54*, 669–681.

Downloaded by [Mohsen Maboodi] at 22:53 16 January 2014